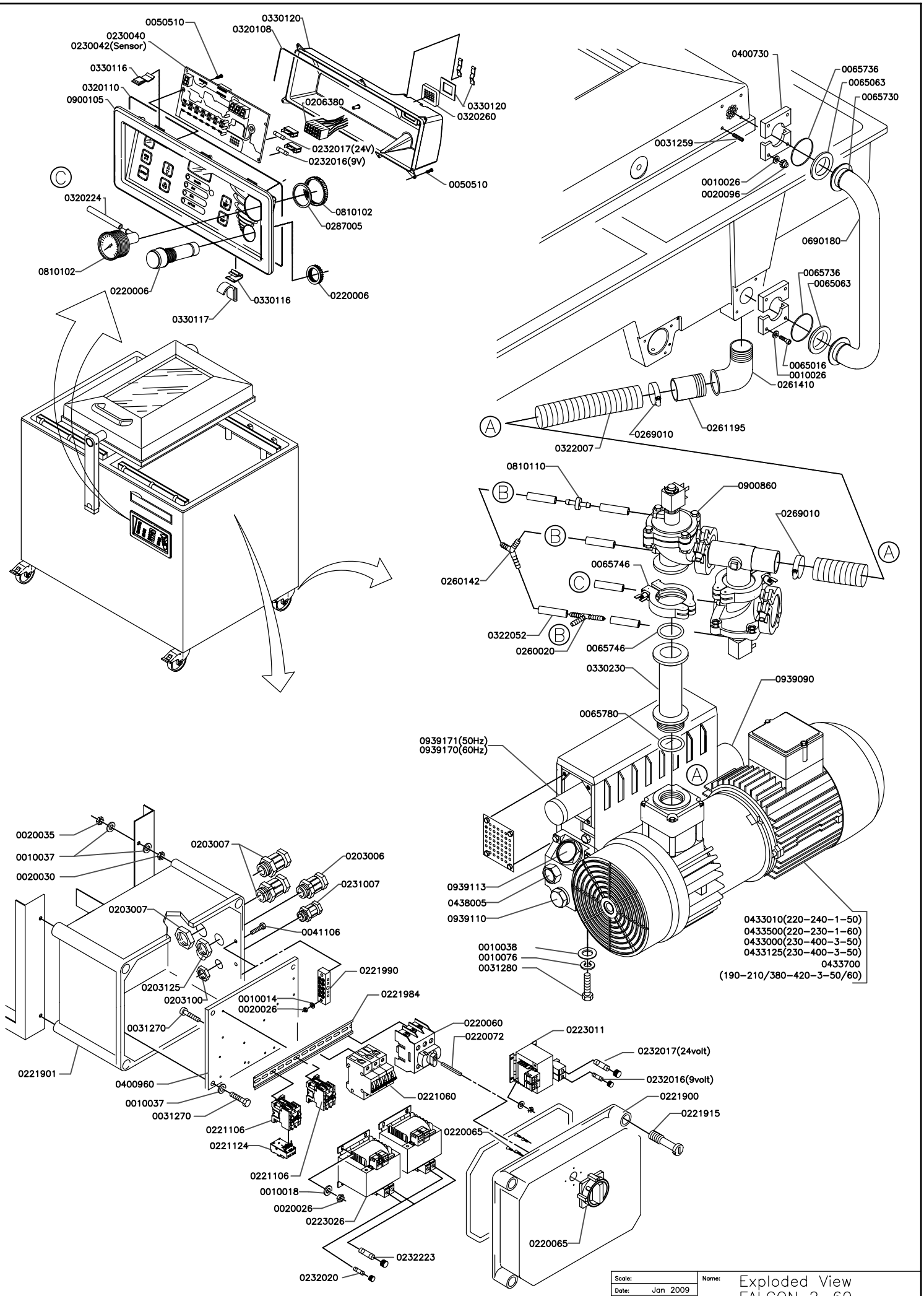

Scale:	Name:	Exploded View FALCON 2-60
Date: Jan 2009		
Drawn by: MD		

HENKELMAN B.V.
PO. box 2117
5202 CC 's-Hertogenbosch
Tel. ++31(0)73 - 6213671
Fax ++31(0)73 - 6221318
The Netherlands

A 4 | Drawing: Page 1-3

Rev 050

Ownership explicitly reserved. Multiplication or information to third - parties in any form is not permitted without written permission of the owner.